MOTION COMPOSITES
160 Armand-Majeau Sud
Saint-Roch-de-l'Achigan, QC, Canada J0K 3H0
T.+1-866-650-6555 F. +1-888-966-6555
quotes@motioncomposites.com
orders@motioncomposites.com
www.motioncomposites.com

Helio A6

ORDER FORM - ONTARIO

1- Purchasing information

P.O. number:* Date:

Company Name:*

Purchasing contact:*

Phone:*

Email:*

Contact preference:* Phone ☐ Email ☐

Marked for:

2- Dealer/Representative information

Dealer/Representative:*

Phone:*

Email:*

Contact preference:* Phone ☐ Email ☐

3- Shipping information

Ship to:*

Name:

Address:

City: Province:

Postal Code:

Phone:

** Required*

MA080 ☐ *English Manual (STD)* *MA081* ☐ *French Manual* *Taxes not included*

MODEL					
WC19	☐	Ultralight folding Helio A6 Wheelchair - *6000 series aluminum (265lb weight capacity)*		WM0001489	**$2,345**
WC09	☐	**HD** Heavy duty kit *(350 lb weight capacity)*			$850
Frame					
SEAT WIDTH [3]					
SW	☐	14" ☐ 15" ☐ 16" ☐ 17" ☐ 18" [1] ☐			NC
	☐	19" [1] ☐ 20" [1] ☐ 21" [2] ☐ 22" [2] ☐		WAMA	$320
SEAT DEPTH					
SD	☐	14" ☐ 15" ☐ 16" ☐ 17" ☐ 18" ☐			NC
	☐	19" ☐ 20" ☐		WAMB	$280
FRAME LENGTH [5]					
SP01	☐	Standard frame length configuration			STD
SP02	☐	Frame length 1" longer than standard configuration			NC
SP03	☐	Frame length 2" longer than standard configuration			NC
SP04	☐	Frame length 1" shorter than standard configuration			NC
SP05	☐	Frame length 2" shorter than standard configuration			NC
TRANSIT TIE DOWN					
AC04	☐	Transit Tie Down *(Unoccupied)*			NC
AC05-S	☐	WC-19 Transit Tie Down w/Q'straint belt [4] Short belt 20"-41"			$370
AC05-L	☐	WC-19 Transit Tie Down w/Q'straint belt [4] Long belt 20"-46"			$370
AC35	☐	WC-19 Transit Tie Down without belt [4]			$345

1- *Available with HD Kit (350 lb);* ***2-*** *Only with HD Kit (350 lb)*

4- *May interfere with swing away armrest and Clamp on height adjustable push handle; Not available with HD option*

5 *- See table on page 8*

3. Width calculator

PACKAGES			
VP01	☐	Vision Package: *Orange accent added to point of contact accessories including: footrest latches, "T" and fllp back armrest button cap, 6" Push to lock extension and rubber inserts on Newton composite angle adjustable footplates* [1]	$95

1- Please select footplates, footrest, armrest, push to lock wheel lock and the extensions in the appropriate sections; To know the compatible parts, look for this logo ****VP01*** *; Recommended with black chair; See picture of the product on page 7.*

A6 FRONT Seat-to-floor Height - Please select your choice

Forks / Position		3" caster Stem bolt Length STD	3" caster +1"	3" caster +2"	4" caster Stem bolt Length STD	4" caster +1"	4" caster +2"	5" caster Stem bolt Length STD	5" caster +1"	5" caster +2"	6" caster Stem bolt Length STD	6" caster +1"	6" caster +2"	7" caster Stem bolt Length STD	7" caster +1"	7" caster +2"	8" caster Stem bolt Length STD	8" caster +1"	8" caster +2"
4"	P1	12"	13"	14"	12 1/2"	13 1/2"	14 1/2"												
	P2	12 1/2"	13 1/2"	14 1/2"	13"	14"	15"		14 1/2"	15 1/2"									
5"	P1																		
	P2				13"	14"	15"	13 1/2"	14 1/2"	15 1/2"									
	P3	13"	14"	15"	13 1/2"	14 1/2"	15 1/2"	14"	15"	16"		15 1/2"	16 1/2"						
	P4	13 1/2"	14 1/2"	15 1/2"	14"	15"	16"	14 1/2"	15 1/2"	16 1/2"	15"	16"	17"		16 1/2"	17 1/2"			
7"	P1										15 1/2"	16 1/2"	17 1/2"	16"	17"	18"			
	P2							15 1/2"	16 1/2"	17 1/2"	16"	17"	18"	16 1/2"	17 1/2"	18 1/2"			
	P3							16"	17"	18"	16 1/2"	17 1/2"	18 1/2"	17"	18"	19"	17 1/2"	18 1/2"	19 1/2"
	P4	15 1/2"	16 1/2"	17 1/2"	16"	17"	18"	16 1/2"	17 1/2"	18 1/2"	17"	18"	19"	17 1/2"	18 1/2"	19 1/2"	18"	19"	20"
	P5	16"	17"	18"	16 1/2"	17 1/2"	18 1/2"	17"	18"	19"	17 1/2"	18 1/2"	19 1/2"	18"	19"	20"	18 1/2"	19 1/2"	20 1/2"
Froglegs	P1				13 1/2	14 1/2	15 1/2												
	P2	13 1/2	14 1/2	15 1/2	14	15	16	14 1/2	15 1/2	16 1/2									
	P3	14	15	16	14 1/2	15 1/2	16 1/2	15	16	17	15 1/2	16 1/2	17 1/2						

Height available +- 1/4" (see stem bolt and fork combination at the end of the order form); Orange boxes are not available with a seat slope of more than 1.5in.

FRONT CASTERS

CASTERS			Availability		
CA01-03 to CA01-08		Composite wheel w/ PU tire (1")	3", 4", 5", 6", 7", 8"		NC
CA10 to CA11		Pneumatic casters (1 ¼")	6", 8"		$170
CA14 to CA16		Newton UltraCaster Composite (1 ½ ")	4", 5", 6"		$120
CA17 to CA19		Newton UltraCaster Aluminum (1 ½ ")	4", 5", 6"		$198
CASTER OPTIONS					
CA12		Caster Pin Locks *(Available with +1" or +2" Stem bolt ONLY)* [1]		WAMS	$275
CA13		Carbon fiber Frog Legs suspension forks (Not available with caster pin locks)			$525

1- Not available with WC-19

Helio A6 - REAR Seat-to-floor Height - Please select your choice

20" (451)	22" (501)	24" (540)	25" (559)	26" (590)
12"	13"	13 3/4" [1]	14 1/4"	14 3/4"
12 1/2"	13 1/2"	14 1/4"	14 3/4"	15 1/4"
13"	14"	14 3/4"	15 1/4"	15 3/4"
13 1/2"	14 1/2"	15 1/4"	15 3/4"	16 1/4"
14"	15"	15 3/4"	16 1/4"	16 3/4"
14 1/2"	15 1/2"	16 1/4"	16 3/4"	17 1/4"
15"	16"	16 3/4"	17 1/4"	17 3/4"
15 1/2"	16 1/2"	17 1/4"	17 3/4"	18 1/4"
16"	17"	17 3/4"	18 1/4"	18 3/4"
16 1/2"	17 1/2"	18 1/4"	18 3/4"	19 1/4"
17"	18"	18 3/4"	19 1/4"	19 3/4"
17 1/2"	18 1/2"	19 1/4" [1]	19 3/4"	20 1/4"

Configuration used: 1" seat slope with a center of gravity at 2" ***1-*** *Not available with One Arm Drive*

Note: Tire size, center of gravity setting and seat slope may result in a variation of +/- ½" of selected seat to floor height"

REAR WHEELS

ONE ARM DRIVE [1] *Only available with Newton One rear wheel, permanent axles and 0° camber*					
HR22	☐	One arm drive - aluminum inner handrim [2] Left ☐ Right ☐		WAML	$1,480
HR60	☐	One arm drive - plastic coated inner handrim [2] Left ☐ Right ☐		WAML	$1,595
HR98	☐	Omit handrim on opposite side of the One Arm Drive (OAD)			NC
REAR WHEELS			Available		
RW01	☐	Mag [3]	20", 22" 24"		$150
RW02	☐	Newton One - spoke wheel [4]	20", 22" 24"		NC
RW03	☐	Newton Gravity - ultralight wheel	20", 22", 24", 25", 26"		$390
RW04	☐	Spinergy Spox **Blk STD** ☐ Wht [5] ☐ Blue [5] ☐ Red [5] ☐ Yel [5] ☐	22", 24", 25", 26"		$915
RW05	☐	Spinergy LX **Blk STD** ☐ Pur [5] ☐ Wht [5] ☐ Blue [5] ☐ Red [5] ☐ Yel [5] ☐ Pink [5] ☐ Grn [5] ☐ Org [5] ☐	22", 24", 25", 26"		$1,135
RW07	☐	Spinergy CLX [6] **Blk STD** ☐ Pur [5] ☐ Wht [5] ☐ Blue [5] ☐ Red [5] ☐ Yel [5] ☐ Pink [5] ☐ Grn [5] ☐ Org [5] ☐	24", 25"		$1,690
TIRES			Available		
		AIRLESS			
TI01	☐	Soft Urethane 1 3/8" - Low Tread, black	20", 22" 24"		STD
TI02	☐	Soft Urethane 1 3/8 " - Medium Tread, black [7]	22", 24", 25", 26"		$120
TI04	☐	Soft Urethane 1" - No tread, black - *Shox*	22", 24", 25", 26"		$150
TI08	☐	Pneumatic Airless insert 1 3/8" - Medium Tread [8]	22", 24", 26"		$235
		PNEUMATIC			
TI05	☐	Pneumatic 1 3/8" - Medium Tread	20", 22", 24", 25", 26"		NC
TI06	☐	Pneumatic HP 1" - Low Tread, Puncture resistant, black - *SpeedLite*	20", 22", 24", 25", 26"		$130
TI07	☐	Pneumatic HP 1" - Medium Tread, Puncture resistant, black - *TrailBlazer*	24", 25", 26"		$210
TI03	☐	Pneumatic 2" - Large Tread, black [9]	22", 24", 25"		$140

1- *Offered with handrims on each side of the wheelchair; select the outer handrim in the handrims section; Only available with 24" wheel size; Not available with 21" and 22" wide;*
2- *Only standard handrim position available;* ***3-*** *Not compatible with HP tires ; Only available with aluminum or plastic coated handrim, standard position;* ***4-*** *Not compatible with Shox tires;*
5- *color spokes require an additionnal 10 days lead-time;* ***6-*** *Only available with 1" tires;* ***7-*** *22" is only available with Mags and Newton One rear wheels; 25" and 26" are not available with Newton Gravity wheels*
8- *Not available with Spinergy CLX, Spinergy LX 25", 26" and Spox 25", 26" rear wheels;* ***9-*** *Not available with armrests when 3° camber is selected.*

HANDRIMS

HANDRIM			Available		
HR01	☐	Aluminum anodized	20", 22", 24", 25", 26"		STD
HR61	☐	Aluminum black hard anodized [2]	20", 22", 24", 25"		$95
HR02	☐	Plastic coated [1]	20", 22", 24", 25", 26"	WAMO	$180
HR03	☐	High friction coated [1,2,3]	22", 24", 25", 26"	WAMO	$460
HR07-HR18 and HR65-HR71	☐	Newton Air Grip [2] *See page 6 for the color selection and price*	20", 22", 24", 25", 26"	WAMO	
HR28	☐	Surge [1,2,3,4] *(1 1/2" Oval handrim w/ Gripton high friction strip)*	22", 24", 25", 26"		$485
HR05	☐	Surge LT [1,2,3,4] *(1 1/8" Oval handrim w/ Gripton high friction strip)*	22", 24", 25", 26"		$515
HR04	☐	Natural Fit [1,2,3,4]	22", 24", 25", 26"		$320
HR62	☐	Simi H [1,2,3] *(1 3/8" Oval handrim with high friction strip)*	22", 24", 25", 26"		$485
HR63	☐	Nova H [1,2,3] *(1 1/4" Oval handrim with high friction strip)*	22", 24", 25", 26"		$515
HR64	☐	Optimum H [1,2,3] *(1 1/8" heart-shaped handrim)*	22", 24", 25", 26"		$320
HR99	☐	Omit handrim			NC

1- *Only standard and narrow handrim position. By default, the tab won't be cut with the narrow position;* ***2-*** *Not available with Mag wheels;* ***3*** *- Not available with one arm drive;*
4 *- 25" and 26" are not available in narrow position; 24" is not available with the Spinergy Spox, LX and CLX in narrow position; CLX rear wheel are not available with thumb piece*

HANDRIMS OPTION

ASSEMBLY POSITION					
HR29	☐	Standard Handrim position *Full tab*			STD
HR030	☐	Narrow Handrim position no cut *Full tab*			NC
HR30	☐	Narrow Handrim position with cut [5] *Short tab 2 positions*			$29
HR31	☐	Super Narrow Handrim [5] *Short tab 2 positions STD* ☐ *Short tab 1 position* ☐			$29
THUMB PIECE SELECTION FOR NATURAL FIT, SURGE, SURGE LT HANDRIMS					
HR23	☐	Standard grip			$200
HR27	☐	Super grip			$230
HR099	☐	Omit thumb piece			NC

5- *Only available with Aluminum and Air Grip handrims;*

AXLE					
AX01	☐	Quick release axle [1]		WAMU	$100
AX02	☐	Permanent axle			$100
AX03	☐	Quad release axle [1]		WAMU	$280
AXLE PLATE					
AX04	☐	Amputee adjustable axle plate [2]		WAMT	$280

1- *Not required with one arm drive;* ***2*** *- May interfere with swing away armrest and limit seat to floor height; Not available with WC-19 transit tie down*

REAR WHEEL CAMBER					
CM00	☐	0° camber			STD
CM03	☐	3° camber			NC

CENTER OF GRAVITY

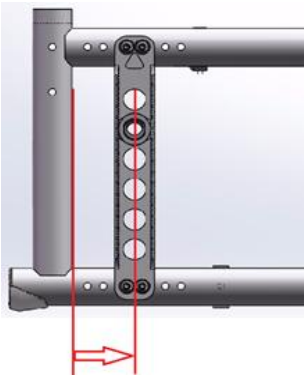

Choose position of rear wheel axle plate:

Measure distance from front of back post to center of axle receiver.

Default setting is at 1 1/4"

Most stable						Most responsive
AMPUTEE[1]	3/4"	1" 1/4	1" 3/4	2" 1/4	2" 3/4	
☐	☐	☐	☐	☐	☐	

Motion Composites will select the closest possible center of gravity (COG) if an issue arises with the COG

1- Only available with amputee axle plate

WHEEL LOCK

WL08	☐	Newton Wheel lock - push to lock			STD
WL16	☐	Aluminum push to lock **with** extensions			$85
WL02	☐	Pull to lock			NC
WL04	☐	Newton grade aid push to lock *(works best with pneumatic or high pressure tire)*		WAMR	$200
WL13 WL14	☐	6" removable extension handle [1] *VP01			$75
WL05	☐	Scissors Lock			$200
WL06	☐	Attendant Lock *(additional set of wheel lock mounted to the back)*			$240
WL15	☐	Unilateral wheel lock - pull to lock[2] Left ☐ Right ☐		WAMN	$335
WL99	☐	Omit wheel locks			NC

1- Only available with Newton push to lock (WL08), pull to lock (WL02) and Newton Grade aid (WL04); Only the extension for the Newton push to lock is available with the vision package (VP01)
2- For more information about incompatibilties and restriction, refer to the table at page 7 and the "How-to documents" page of our website:
https://www.motioncomposites.com/en_ca/support-and-education/how-to-documents

FOOTREST

SWING-IN/SWING-OUT FOOTREST

FR03-01	☐	60° Swing-in/swing-out footrest - 13.5" - 17"		Set at*:		NC
FR03-02	☐	60° Swing-in/swing-out footrest - 14.5" - 19.5"		Set at*:		NC
FR03-03	☐	60° Swing-in/swing-out footrest - 15.5" - 20.5"		Set at*:		NC
FR04-01	☐	70° Swing-in/swing-out footrest - 13.5" - 17"		Set at*:		NC
FR04-02	☐	70° Swing-in/swing-out footrest - 14.5" - 19.5"		Set at*:		NC
FR04-03	☐	70° Swing-in/swing-out footrest - 15.5" - 20.5"		Set at*:		NC
FR15-01	☐	80° Swing-in/swing-out footrest - 13.5" - 16" [5]		Set at*:		NC
FR15-02	☐	80° Swing-in/swing-out footrest - 14.5" - 19.5" [5]		Set at*:		NC
FR15-03	☐	80° Swing-in/swing-out footrest - 15.5" - 20.5" [5]		Set at*:		NC
FR06	☐	90° swing-in/swing-out with front mount - Standard (no extension) [1]	7.5" - 11"	Set at*:		NC
FR07	☐	90° swing-in/swing-out with front mount - Short extension 2" [1, 2]	9.5"- 13"	Set at*:		NC
FR08	☐	90° swing-in/swing-out with front mount - Medium extension 4" [1, 2]	9.5" - 14.5"	Set at*:		NC

FOOTREST OPTIONS

FR09	☐	High mount *(footplate attached to the hanger with clamps)* [3]	5" - 13.5"	Set at*:		$105
FR10	☐	Elevating legrest with calf pad, Length adjustable [4] Left ☐ Right ☐	14" - 22"	Set at:	WAMK	$295
FR99	☐	Omit Footrest				NC

***1-** Available only with two piece adjustable footplates; **2-** May interfere with front casters; **3-** Not available with front mount and the elevating legrest; * +/- 1/2"*
***4-** The elevating legrest replace the footrest side selected; Not available with one piece footplate; **5-** Not available with 8" caster*

FOOTPLATES

FP01	☐	Standard - Composite[1]			STD
FP02	☐	Newton adjustable angle - Composite *VP01		WAMJ	$155
FP03	☐	Newton adjustable angle - Aluminum		WAMJ	$175
FP23	☐	Newton adjustable angle extra deep - Aluminum		WAMJ	$175
FP06	☐	One piece adjustable angle flip-up - Aluminum	WAMJ	SEFND0015	$215

FOOTPLATE ACCESSORIES

FP08	☐	Length adjustable heel loop [2]			NC
FP09	☐	Calf strap		SEFND0010	$62
FP30	☐	Bodypoint Aeromesh Padded calf strap		SEFND0010	$145

***1-** Not available with front mount; **2-** not available with one piece footplate*

SWING AWAY RESIDUAL LIMB SUPPORT

FR27	☐	Residual limb support - flat 6"x8"	Left ☐ Right ☐		SEFND0005	$505
FR28	☐	Residual limb support - flat 8"x10"	Left ☐ Right ☐		SEFND0005	$505
FR29	☐	Residual limb support - flat 10"x10"	Left ☐ Right ☐		SEFND0005	$505
FR30	☐	Residual limb support - flat 10"x14"	Left ☐ Right ☐		SEFND0005	$505
FR32	☐	Residual limb support - contour 6"x8"	Left ☐ Right ☐		SEFND0005	$505
FR33	☐	Residual limb support - contour 8"x10"	Left ☐ Right ☐		SEFND0005	$505

SEATING AND BACKREST

BACK UPHOLSTERY							
BH05	☐	Slip-on Nylon back upholstery					NC
BH06	☐	Adjustable tension Nylon back upholstery				WAMD/WAME	$265
BH99	☐	Omit Back upholstery					STD
	☐	NXT back Support					See price list
SEAT CUSHION							
SC01	☐	2" Cushion					$185
SC02	☐	3" Cushion					$205
SC99	☐	Omit seat cushion					STD
	☐	NXT cushion					See price list
FIXED ANGLE BACK CANES WITH INTEGRATED PUSH HANDLE *(push handle included - no further selection needed)*							
BC58-915	☐	Straight aluminum back cane	9" - 15"	*increment of 1/2"*	Set at [2]:		NC
BC58-1521	☐	Straight aluminum back cane	15" - 21"	*increment of 1/2"*	Set at [2]:		NC
BC60	☐	Straight aluminum back cane	21" - 24"	*increment of 1"*	Set at [2]:		$100
BC01-16	☐	8° bend aluminum back cane	16"				NC
BC01-18	☐	8° bend aluminum back cane	18"				NC
BC01-20	☐	8° bend aluminum back cane	20"				NC
BC59	☐	8° bend aluminum back cane	21" - 24"	*increment of 1"*	Set at [2]:		$100
FIXED ANGLE, HEIGHT ADJUSTABLE BACK CANES WITH PUSH HANDLE OPTIONS *(MUST select ONE push handle options)*							
BC11-912	☐	Straight aluminum back cane	9" - 12"	*increment of 1/2"*	Set at [2]:		$80
BC11-1215	☐	Straight aluminum back cane	12" - 15"	*increment of 1/2"*	Set at [2]:		$80
BC11-1518	☐	Straight aluminum back cane	15" - 18"	*increment of 1/2"*	Set at [2]:		$80
BC11-1821	☐	Straight aluminum back cane	18" - 21"	*increment of 1/2"*	Set at [2]:		$80
BC12-1315	☐	8° bend aluminum back cane	13.5" - 15"	*increment of 1/2"*	Set at [2]:		$85
BC12-1518	☐	8° bend aluminum back cane	15" - 18"	*increment of 1/2"*	Set at [2]:		$85
BC12-1821	☐	8° bend aluminum back cane	18" - 21"	*increment of 1/2"*	Set at [2]:		$85
ANGLE AND HEIGHT ADJUSTABLE BACK CANE WITH PUSH HANDLE OPTIONS *(MUST select ONE push handle options)*							
BC13-1518	☐	Straight aluminum back cane	15" - 18"	*increment of 1/2"*	Set at [2]:		$275
BC13-1821	☐	Straight aluminum back cane	18" - 21"	*increment of 1/2"*	Set at [2]:		$275
BC14-1518	☐	8° bend aluminum back cane	15" - 18"	*increment of 1/2"*	Set at [2]:		$330
BC14-1821	☐	8° bend aluminum back cane	18" - 21"	*increment of 1/2"*	Set at [2]:		$330
		Select back cane angle:	85° [1] ☐	90° **STD** ☐	95° ☐	100° ☐	105° ☐ 110° ☐
PUSH HANDLES OPTIONS *(ONE option at a time)*							
PH01	☐	Push handles					STD
PH05	☐	Fold down push handles [3, 5]					$165
PH06-920	☐	Clamp on height adjustable push handles 9"-20" [3,4, 5]					$345
PH06-923	☐	Clamp on height adjustable push handles 9"-23" [3,4, 5]					$345
PH02	☐	Omit push handles					NC
STROLLER HANDLE AND STABILIZER BAR *(only available with push handle)*							
PH04	☐	Stroller handle *(not available with the HD option)*				WAMW	$220
PH03	☐	Newton folding stabilizer bar *(not available with stroller handle)*					$275

***1-** Not compatible with 8 degree bent back cane; **2-** If not indicated, default height setting is at the lowest position; measured from seat sling to top of back upholstery; **3-** 265lb weight limit*
***4-** Not compatible with swing away armrests, 8° bend back canes, 9-12" and 21-24" back canes and amputee axle plates; 5- Not compatible with stroller handler, stabilizer bar, headrest and attendant lock;*

ARMRESTS

HEIGHT ADJUSTABLE FLIP BACK ARMREST *(Convertible to "T" armrest)* [1, 4] ***VP01**							
AR01-812	☐	10" Desk length armpad	8" - 12"	Locked ☐	Unlocked STD ☐		$405
AR01-1014	☐	10" Desk length armpad	10" - 14"	Locked ☐	Unlocked STD ☐		$405
AR02-812	☐	14" Full length armpad	8" - 12"	Locked ☐	Unlocked STD ☐		$405
AR02-1014	☐	14" Full length armpad	10" - 14"	Locked ☐	Unlocked STD ☐		$405
HEIGHT ADJUSTABLE "T" ARMREST [1] ***VP01**							
AR13-610	☐	10" Desk length armpad [5]	6" - 10"				$385
AR13-812	☐	10" Desk length armpad	8" - 12"				$385
AR13-1014	☐	10" Desk length armpad	10" - 14"				$385
AR14-610	☐	14" Full length armpad [5]	6" - 10"				$385
AR14-812	☐	14" Full length armpad	8" - 12"				$385
AR14-1014	☐	14" Full length armpad	10" - 14"				$385
SWING AWAY ARMREST [2]							
AR05	☐	Tubular armrest - Short pad	8" - 11"				$325
AR23	☐	Tubular armrest - long pad	8" - 11"				$325
AR06	☐	10" Desk length flat armpad	8" - 11"				$325
AR17	☐	14" Full length flat armpad	8" - 11"				$325
ARMREST OPTIONS							
AR12	☐	14'' Full Length armpad - Gel Ovation (pair) [3]				SEAND0030	$160
AR99	☐	Omit armrest					NC

***1-** May have 1/2" adjustment restriction on both limits of the range; **2-** Could interfere with some rigid backrests; Not available with attendant lock and fixed carbon fiber side guards;*
***3-** Only available with full length armrest; Not available with swing away and desk lenght armrests; **4-** Not available with attendant lock; **5-** May have some restriction with seat-to-floor height and rear wheel*

ACCESSORIES

SIDE GUARDS *(not available with Flip Back and "T" Armrest)*							
SG01	☐	Plastic side guards *(removable)*	Straight bracket - STD ☐	Offset bracket[1] ☐		WAMV	$235
SG02	☐	Carbon fiber side guards *(fixed)*				WAMV	$285
SG03	☐	Carbon fiber side guards *(removable)*	Straight bracket - STD ☐	Offset bracket[1] ☐		WAMV	$320
SG06	☐	Plastic fender side guards *(removable)*	Straight bracket - STD ☐	Offset bracket[1] ☐		WAMV	$340
SG04	☐	Carbon fiber fender side guards *(removable)*	Straight bracket - STD ☐	Offset bracket[1] ☐		WAMV	$535
SG99	☐	Omit side guard					NC

***1-** only compatible with 0° camber;Increase width by 1/2" per side for a total of 1" ;*

POSITIONING BELT					
SB01-S	☐	Velcro adjustable - **Small 35"** [1]			$50
SB01-L	☐	Velcro adjustable - **Long 60"**			$50
SB02-S	☐	Auto buckle - **Small 35"** [1]			$80
SB02-M	☐	Auto buckle - **Medium 48"**			$80
SB02-L	☐	Auto buckle - **Long 60"**			$80
SB04-M	☐	BodyPoint Hip Belt - 2 point not padded - **Medium 56"**			$105
SB04-L	☐	BodyPoint Hip Belt - 2 point not padded - **Long 61"**			$105
SB05-S	☐	BodyPoint Hip Belt - 2 point padded - **Small 51"**		SERND0030	$195
SB05-M	☐	BodyPoint Hip Belt - 2 point padded - **Medium 56"**		SERND0030	$195
SB05-L	☐	BodyPoint Hip Belt - 2 point padded - **Long 61"**		SERND0030	$195
SB06-S	☐	BodyPoint Hip Belt - 4 point padded - **Small 51"**		SERND0020	$220
SB06-M	☐	BodyPoint Hip Belt - 4 point padded - **Medium 56"**		SERND0020	$220
SB06-L	☐	BodyPoint Hip Belt - 4 point padded - **Long 61"**		SERND0020	$220
SB03	☐	Hardware attachment for 2 extra points (1 pair)			$15
SB08-M	☐	BodyPoint EVOFLEX® Positioning Belt Rehab latch and Band Clamps - **Medium 18"**			$365
SB08-L	☐	BodyPoint EVOFLEX® Positioning Belt Rehab latch and Band Clamps - **Long 24"**			$365
SB99	☐	Omit positioning belt			STD

1- Not recommended for seat width of 18" and more

HEADREST					
AC01-S	☐	Profiled Headrest - **Small (3.5"X6")**			$215
AC01-M	☐	Profiled Headrest - **Medium (4.5"X7")**			$215
AC01-L	☐	Profiled Headrest - **Large (5.5"X8")**			$215
AC28	☐	Headrest mounting hardware with removable non folding stabilizer bar [1]			$365

1- Only available with push handles - Not available with a stroller handle or a folding stabilizer bar

ACCESSORIES						
AC03	☐	Anti-tippers				$125
AC29	☐	Swing-away anti-tipper[1]	Left ☐	Right ☐		$190
AC27	☐	Tip assist [2]				$70
AC06	☐	Cane and crutch holder	Left ☐	Right ☐		$115
AC07	☐	Oxygen tank holder [4] - D and E Type - *Installed to the left*				$395
AC08	☐	Spoke guards [3]	Available: 20", 22", 24", 25", 26"		WAMP	$165
AC09	☐	Footrest neoprene impact guard *(pair)* - Black			SEFND0035	$90
AC10	☐	Seat pouch				$105
AC30	☐	Newton multi-purpose pouch				$80
AC26	☐	BodyPoint Mobility Bag				$150
AC23	☐	Newton Backpack				$135
AC12	☐	Velcro Closing Strap				$60
AC13	☐	Tool kit				$60

***1-** Must select the pair (left and right) with HD option; Only available with rear seat to floor height between 13 1/2" and 19 3/4"; Not available with amputee axle plate; 2- Cannot be combined with Anti Tippers;*
***3-** Not available with Mag wheels and Spinergy; the 24" spoke guard will be installed on the 25" wheel ; **4-** Not compatible with swing away armrest, amputee axle plate and WC-19 transit tie-down*

Colors

Options [1]	Black	Sunkissed Orange	Burgundy	Sapphire Blue	Monster Green	Charcoal	Fuchsia	Steel Blue	Ferrari Red	Acid Green	Electric Purple	Caribbean Blue	White	Pink Pearl	Plum Purple	Sky Blue	Black Cherry	Khaki Green (matte)	Desert Sand (matte)	
AirGrip	☐ $160	☐	☐	☐	☐	☐	☐	☐	☐	☐	☐	☐	☐	☐	☐	☐	☐	☐	☐	$350
Frame [2]	☐ STD	☐	☐	☐	☐	☐	☐	☐	☐	☐	☐	☐	☐	☐	☐	☐	☐	☐	☐	NC
FC99	☐	Custom Color	Specify PPG Paintit color:														*additional 10 days lead-time*			$422

***1-** Color representation may vary from one monitor to another. Therefore, the actual paint color on your wheelchair might differ slightly from what you see on your screen.; Finish between Airgrip and frame might be different;*
***2-** with black hydroformed aluminum crossbrace*

Fork and Stem bolt combinations

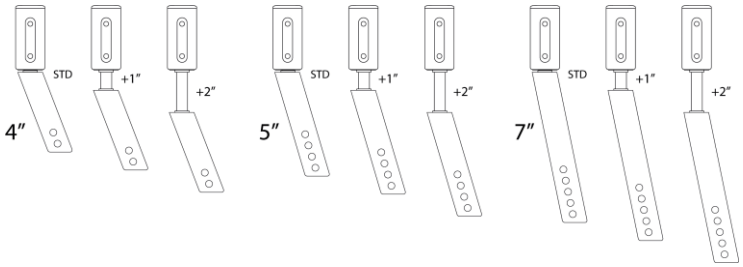

Frame length chart

	Seat Depth						
Frame length	**14"**	**15"**	**16"**	**17"**	**18"**	**19"**	**20"**
STD							
+1							*N/A*
+2						*N/A*	*N/A*
-1	*N/A*						
-2	*N/A*	*N/A*					

Unilateral wheel lock restrictions

Seat depth: shall be 16 in and greater
Rear wheel: shall be 24 in and less
"T" or flip-back armrest only compatible with 0° Camber
One arm drive: Not compatible with "T" or flip-back armrest
"T" or flip-back armrest may require to move the rear wheels outwards
Not compatible with wheel lock lever extension

Rear wheel diameter	Seat depth (in)	COG Compatibility Range (in)
20 in	16+	1.25 to 2.75
22 in	16	0.75 to 2.25
	17+	0.75 to 2.75
24 in	16	0.75 to 1.75
	17	0.75 to 2.25
	18+	0.75 to 2.75

EVO CUSTOM

CUSTOMIZATION STARTS HERE!

With EVO Custom, whether it's a subtle tweak for comfort or mobility, or a fully reimagined component tailored to your unique needs, we're here to support you.

Explore the **EVO Custom Catalog**.

You can include your request or reference an existing customization from our catalog in the notes section below.

Have a customization in mind or a specific request? The **EVO Custom Request Form** is the best place to start.

Note :

FOLDING ON CHAIR – CDN ORDER FORM

BioFit™ CUSHION

☐ Use wheelchair configuration

Or use this size:

NXCABF _____

(W" x D")

DEPTH \ WIDTH	12"	13"	14"	15"	16"	17"	18"	19"	20"	21"	22"
12"	$625	$625	$625		N/A	N/A	N/A	N/A	N/A	N/A	N/A
13"						N/A	N/A	N/A	N/A	N/A	N/A
14"	$625	$625	$625								
15"		$625	$625	$625	$625						
16"		$625	$625	$625	$625	$625	$625	$655	$655	$655	$655
17"	N/A			$625	$625	$625	$625	$655	$655		
18"	N/A			$625	$625	$625	$625	$655	$655	$655	$655
19"	N/A			$625	$625	$625	$625	$655	$655		
20"	N/A			$625	$625	$625	$655	$655	$655	$655	$655

Option: Change cover for incontinent/infection control outer cover ☐ N/C

Green boxes are stocked sizes; the red boxes require customization*; the N/A boxes are not available sizes.

*Customization (red boxes) is available with an upcharge of $160.00 and has a 4 to 6 weeks additional lead time.

SEATING AND CUSHION ACCESSORIES

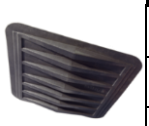

MODEL #	Description	Fits Back Width	Retail	QTY
RSSI 1600	Solid Seat Insert	Fits cushions 16" & 17" wide (40.6-43.2 cm) and 14"-18" deep (35.6-45.7 cm)	$80	
RSSI 1800	Solid Seat Insert	Fits cushions 18" & 19" wide (45.7-48.3 cm) and 14"-18" deep (35.6-45.7 cm)	$80	
RSSI 2000	Solid Seat Insert	Fits cushions 20"-22" wide (50.8-55.9 cm) and 18"-20" deep (45.7-50.8 cm)	$80	

THORACIC SHAPE

Optima™

THORACIC BACK SUPPORT

CARBON FIBER SHELL (WEIGHT SAVINGS – 1lb)

WIDTH	HEIGHT	MODEL # CARBON FIBER	$ CARBON	MODEL # ALUMINUM	$ ALUMINUM
14"	13"	NOCFACB1413	☐ $1,150	NOACB1413	☐ $725
14"	16"	NOCFACB1416	☐ $1,150	NOACB1416	☐ $725
15"	13"	NOCFACB1513	☐ $1,150	NOACB1513	☐ $725
15"	16"	NOCFACB1516	☐ $1,150	NOACB1516	☐ $725
16"	13"	NOCFACB1613	☐ $1,150	NOACB1613	☐ $725
16"	16"	NOCFACB1616	☐ $1,150	NOACB1616	☐ $725
16"	19"			NOACB1619	☐ $725
17"	13"	NOCFACB1713	☐ $1,150	NOACB1713	☐ $725
17"	16"	NOCFACB1716	☐ $1,150	NOACB1716	☐ $725
18"	13"	NOCFACB1813	☐ $1,150	NOACB1813	☐ $725
18"	16"	NOCFACB1816	☐ $1,150	NOACB1816	☐ $725
18"	19"			NOACB1819	☐ $725
19"	16"			NOACB1916	☐ $725
19"	19"			NOACB1919	☐ $725
20"	13"	NOCFACB2013	☐ $1,150	NOACB2013	☐ $725
20"	16"	NOCFACB2016	☐ $1,150	NOACB2016	☐ $725
20"	19"			NOACB2019	☐ $725
21"	16"			NOACB2116	☐ $755
21"	19"			NOACB2119	☐ $755
22"	13"			NOACB2213	☐ $755
22"	16"			NOACB2216	☐ $755
22"	19"			NOACB2219	☐ $755

ITEM	WIDTH X DEPTH	RETAIL	QTY
Replacement Cover & Foam	NOACC _____	$130	

Optima™ DEEP

THORACIC BACK SUPPORT

CARBON FIBER SHELL (WEIGHT SAVINGS – 1lb)

WIDTH	HEIGHT	MODEL # CARBON FIBER	$ CARBON	MODEL # ALUMINUM	$ ALUMINUM
14"	13"	NOCFPCB1413	☐ $1,250	NOPCB1413	☐ $825
14"	16"	NOCFPCB1416	☐ $1,250	NOPCB1416	☐ $825
15"	13"	NOCFPCB1513	☐ $1,250	NOPCB1513	☐ $825
15"	16"	NOCFPCB1516	☐ $1,250	NOPCB1516	☐ $825
16"	13"	NOCFPCB1613	☐ $1,250	NOPCB1613	☐ $825
16"	16"	NOCFPCB1616	☐ $1,250	NOPCB1616	☐ $825
16"	19"			NOPCB1619	☐ $825
17"	13"	NOCFPCB1713	☐ $1,250	NOPCB1713	☐ $825
17"	16"	NOCFPCB1716	☐ $1,250	NOPCB1716	☐ $825
18"	13"	NOCFPCB1813	☐ $1,250	NOPCB1813	☐ $825
18"	16"	NOCFPCB1816	☐ $1,250	NOPCB1816	☐ $825
18"	19"			NOPCB1819	☐ $825
19"	16"			NOPCB1916	☐ $825
19"	19"			NOPCB1919	☐ $825
20"	13"	NOCFPCB2013	☐ $1,250	NOPCB2013	☐ $825
20"	16"	NOCFPCB2016	☐ $1,250	NOPCB2016	☐ $825
20"	19"			NOPCB2019	☐ $825
21"	16"			NOPCB2116	☐ $860
21"	19"			NOPCB2119	☐ $860
22"	13"			NOPCB2213	☐ $860
22"	16"			NOPCB2216	☐ $860
22"	19"			NOPCB2219	☐ $860

ITEM	WIDTH X DEPTH	RETAIL	QTY
Replacement Cover & Foam	NOPCC _____	$130	

PLEASE NOTE: Each back will fit widths up to 2" wider.

ALL PRICES QUOTED IN CAD PRICES ARE SUBJECT TO CHANGE WITHOUT NOTICE.

For additional NXT models, sizes and hardware not shown, please refer to the complete NXT Seating Order Form at www.motioncomposites.com

Xtend™ LOW HEIGHT ADJUSTABLE THORACIC BACK SUPPORT

THORACIC SHAPE

xtend™	WIDTH	HEIGHT	RETAIL	✓
NHAACB (L)1213/17	12"	13"-17"	$725	
NHAACB (L)1413/17	14"	13"-17"	$725	
NHAACB (L)1613/17	16"	13"-17"	$725	
NHAACB (L)1813/17	18"	13"-17"	$755	
NHAACB (L)2013/17	20"	13"-17"	$755	
NHAACB (L)2213/17	22"	13"-17"	$755	

ITEM	WIDTH X DEPTH	RETAIL	QTY
Replacement Cover & Foam	N3LHAACC _____	$130	

Xtend™ DEEP HEIGHT ADJUSTABLE THORACIC BACK SUPPORT

xtend™ Deep	WIDTH	HEIGHT	RETAIL	✓
NHAPCB1616/20	16"	16"-20"	$725	
NHAPCB1816/20	18"	16"-20"	$725	
NHAPCB2016/20	20"	16"-20"	$725	
NHAPCB2216/20	22"	16"-20"	$755	

ITEM	WIDTH X DEPTH	RETAIL	QTY
Replacement Cover & Foam	N3HAPCC _____	$130	

PLEASE NOTE: Each back will fit widths up to 2" wider.

Classic™ PELVIC BACK SUPPORT

PELVIC SHAPE

Classic™	WIDTH	HEIGHT	RETAIL	✓
NACB1616	16"	16"	$725	
NACB1618	16"	18"	$725	
NACB1816	18"	16"	$725	
NACB1818	18"	18"	$725	
NACB1820	18"	20"	$725	
NACB2020	20"	20"	$725	
NACB2216	22"	16"	$755	
NACB2218	22"	18"	$755	
NACB2220	22"	20"	$755	

ITEM	WIDTH X DEPTH	RETAIL	QTY
Replacement Cover & Foam	NACC _____	$130	

Classic™ DEEP PELVIC BACK SUPPORT

Classic™ Deep	WIDTH	HEIGHT	RETAIL	✓
NPCB1616	16"	16"	$830	
NPCB1618	16"	18"	$830	
NPCB1818	18"	18"	$830	
NPCB1820	18"	20"	$830	
NPCB2020	18"	20"	$830	
NPCB2216	20"	16"	$860	
NPCB2218	22"	18"	$860	
NPCB2220	22"	20"	$860	

ITEM	WIDTH X DEPTH	RETAIL	QTY
Replacement Cover & Foam	NPCC _____	$130	

PLEASE NOTE: Each back will fit widths up to 2" wider.

BACK SUPPORT ACCESSORIES

MODEL #	DESCRIPTION	FITS BACK WIDTH	RETAIL	QTY
Custom - Cover	Optional Infection Control Wipe Down Back Support Cover	Specify back model # when ordering	$205	
NIB-1938	Extra Small Privacy Flap for 11" - 13" wide back supports	11" - 13" (27.9 - 33.0)	$70	
NIB-1078	Small Privacy Flap for 14"-16" wide back supports	14" - 16" (35.6-40.6 cm)	$70	
NIB-1079	Medium Flap for 17"-19" wide back supports	17" - 19" (43.2-48.3 cm)	$70	
NIB-1080	Large Privacy Flap for 20"-22" wide back supports	20" - 22" (50.8-55.9 cm)	$70	
NIB-1081	Extra Large Privacy Flap for 23" - 26" wide back supports	23" - 26" (58.4 - 66.0 cm)	$70	

MultiFit™ HEAD SUPPORT – MULTI-ADJUSTABLE PADS

	MODEL #	Description	RETAIL	✓
	NIB-0784	10" x 5" Large Rectangular	$205	
	NIB-0818	14" x 5" Extra-Large Rectangular	$205	

MultiFit™ HEAD SUPPORT – FIXTURES

	MODEL	Description	RETAIL	✓
	NIB-0747	Multi-Axis Hardware	$150	
	NIB-0823	Head Support Receiver Bracket	$60	

EXTRA COVERS

Extra Outer smartx3D Cover

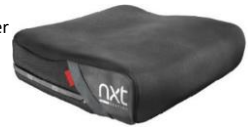

Extra Outer Incontinent Cover

ITEM	WIDTH X DEPTH	RETAIL	QTY
Extra Outer smartx^{3D} Cover – For a cover up to 18" x 18"	NXCCBF_____V	$130	
Extra Outer smartx^{3D} Cover – For a cover 18" x 20" and above	NXCCBF_____V	$150	
Extra Outer Incontinent Cover – For a cover up to 18" x 18"	NXCCAF_____V	$130	
Extra Outer Incontinent Cover – For a cover 18" x 20" and above	NXCCAF_____V	$150	

ALL PRICES QUOTED IN CAD PRICES ARE SUBJECT TO CHANGE WITHOUT NOTICE.

For additional NXT models, sizes and hardware not shown, please refer to the complete NXT Seating Order Form at www.motioncomposites.com